Agilent Gas Sample Selector for 8860 and 8890

User Manual



Notices

Manual Part Number

G3541-90001

Edition

Fourth Edition, September 2023

Copyright

© Agilent Technologies, Inc. 2021

No part of this manual may be reproduced in any form or by any means (including electronic storage and retrieval or translation into a foreign language) without prior agreement and written consent from Agilent Technologies, Inc. as governed by United States and international copyright laws.

Printed in China

Agilent Technologies
(Shanghai) Co., Ltd.
Waigaoqiao Free Trade Zone, Pudong New Area, Shanghai
412 Yinglun Road

Contact number: (800) 820 3278

Warranty

The material contained in this document is provided "as is," and is subject to being changed, without notice, in future editions. Further, to the maximum extent permitted by applicable law, Agilent disclaims all warranties, either express or implied, with regard to this manual and any information contained herein, including but not limited to the implied warranties of merchantability and fitness for a particular purpose. Agilent shall not be liable for errors or for incidental or consequential damages in connection with the furnishing, use, or performance of this document or of any information contained herein. Should Agilent and the user have a separate written agreement with warranty terms covering the material in this document that conflict with these terms, the warranty terms in the separate agreement shall control.

Technology Licenses

The hardware and/or software described in this document are furnished under a license and may be used or copied only in accordance with the terms of such license.

Restricted Rights Legend

U.S. Government Restricted Rights. Software and technical data rights granted to the federal government include only those rights customarily provided to end user customers. Agilent provides this customary commercial license in Software and technical data pursuant to FAR 12.211 (Technical Data) and 12.212 (Computer Software) and, for the Department of Defense, DFARS 252.227-7015 (Technical Data - Commercial Items) and DFARS 227.7202-3 (Rights in Commercial Computer Software or Computer Software Documentation).

Safety Notices

CAUTION

A CAUTION notice denotes a hazard. It calls attention to an operating procedure, practice, or the like that, if not correctly performed or adhered to, could result in damage to the product or loss of important data. Do not proceed beyond a CAUTION notice until the indicated conditions are fully understood and met.

WARNING

A WARNING notice denotes a hazard. It calls attention to an operating procedure, practice, or the like that, if not correctly performed or adhered to, could result in personal injury or death. Do not proceed beyond a WARNING notice until the indicated conditions are fully understood and met.

Contents

1 Safety Information

Safety Information 6
- Safety symbols 6
- Safety and regulatory information 8
- General safety precautions 9

Shipping Instructions 12

Cleaning Instructions 12

Disposal Instructions 12

Intended Use 13

Recycling the Product 13

2 Introduction

Introduction 16
- Gas Sample Selector bag version 17
- Gas Sample Selector cylinder version 21

Specifications 26

Principle of Operation 28

3 Installation

Before You Begin 32

Installation for Bag Version Gas Sample Selector 33
- Shipping kit information (bag version) 33
- Site preparation 34
- Procedure 35

Installation for Cylinder Version Gas Sample Selector 43
- Shipping kit information (cylinder version) 43
- Site Preparation 45

Procedure 46

4 Operation

Method Parameters 54
Building a method 54
Programing a sequence 57

Selector Work Flow 59

5 Maintenance and Troubleshooting

Maintenance 62
Replace gas filter for bag version 62
Replace gas filter for cylinder version 66
Sampling mode 70
Purge mode 72
Sweep mode 74
Consumables and parts 76

Troubleshooting 78
Error list for troubleshooting 78
Chromatographic symptoms 79
Restriction and leak check 82

1 Safety Information

Safety Information 6

Shipping Instructions 12

Cleaning Instructions 12

Disposal Instructions 12

Intended Use 13

Recycling the Product 13

To prevent any injury to the user or any damage to the instrument, it is essential that you read the information in this chapter and the gas chromatograph (GC) user manuals.

If this manual is not in your native language, or if you have problems understanding the text, contact your Agilent office for assistance. Agilent cannot accept responsibility for any damage or injury caused by misunderstanding of the information in this manual.

Safety Information

Safety symbols

Warnings in the manual or on the instrument must be observed during all phases of operation, service, and repair of this instrument. Failure to comply with these precautions violates safety standards of design and the intended use of the instrument. Agilent Technologies assumes no liability for the customer's failure to comply with these requirements.

See accompanying instructions for more information.	
Indicates a hot surface.	
Indicates hazardous voltages.	
Indicates earth (ground) terminal.	
Indicates potential explosion hazard.	
Indicates electrostatic discharge hazard.	
Indicates a hazard. See the Agilent GC user documentation for the item labeled.	

Indicates that you must not discard this electrical/electronic product in domestic household waste



Manufacturing date.



Power symbol indicates **On/Off**. The apparatus is not completely disconnected from the main supply when the power swich is in the **Off** position.



Safety and regulatory information

The Agilent G3451A Gas Sample Selector conforms to the following safety standards:

- Canadian Standards Association (CSA): C22.2 No. 61010-1
- CSA/Nationally Recognized Test Laboratory (NRTL): ANSI/UL 61010-1
- International Electrotechnical Commission (IEC): 61010–1, 61010-2-081
- EuroNorm (EN): 61010–1

The Agilent Gas Sample Selector conforms to the following regulations on electromagnetic compatibility.

- CISPR 11/EN 55011: Group 1, Class A
- IEC/EN 61326-1



NOTE

The Gas Sample Selector is designed and manufactured under a quality system registered to ISO 9001. Declaration of Conformity available.

The Gas Sample Selector meets the following IEC (International Electro-technical Commission) classifications:

- Safety Class 1
- Transient Overvoltage Category II
- Pollution Degree 2

This unit has been designed and tested in accordance with recognized safety standards and is designed for use indoors in nonclassified locations. Do not operate it in an explosive atmosphere. If the instrument is used in a manner not specified by the manufacturer, the protection provided by the instrument may be impaired. Whenever the safety protection of the Gas Sample Selector has been compromised, disconnect the unit from all power sources and secure the unit against unintended operation. Refer servicing to qualified service personnel. Substituting parts or performing any unauthorized modification to the instrument may result in a safety hazard.

Detachable power cord declaration for Japan

（弊社提供の電源コードセットが汎?性がない旨を?す） 電源コードセットの取扱いについて （?本国内向け） 製品には、同梱された電源コードセットをお使いください。 同梱された電源 コードセット は、他の製品では使?できません。

NOTE

The power cords are for the Japanese market. Your product must only use the power cord that was shipped with this product. Do not use this power cord with any other product.

Sound Emission Certification for Federal Republic of Germany

Sound pressure Sound pressure Lp <70 dB(A) according to DIN-EN 27779.
Schalldruckpegel Schalldruckpegel LP <70 dB(A) nach DIN-EN 27779.

General safety precautions

WARNING

When handling or using chemicals for preparation or use within the GC, all applicable local and national laboratory safety practices must be followed. This includes, but is not limited to, correct use of Personal Protective Equipment (PPE), correct use of storage vials, and correct handling of chemicals, as defined in the laboratory's internal safety analysis and standard operating procedures. Failure to adhere to laboratory safety practices could lead to injury or death.

WARNING

This instrument is designed for chromatographic analysis of appropriately prepared samples. It must be operated using appropriate gases, and within specified maximum ranges for pressure, flows, and temperatures as described in this manual. If the equipment is used in a manner not specified by the manufacturer, the protection provided by the equipment may be impaired.

WARNING

It is the responsibility of the customer to inform Agilent customer support representatives if the instrument has been used for the analysis of hazardous samples, prior to any instrument service being performed or when an instrument is being returned for repair.

To ensure safe equipment operation, adhere to the following safety practices:

- Dot not use flammable gas (such as H_2). Use inert gas (such as N_2) instead.
- Perform periodic leak checks on all supply lines and pneumatic plumbing.
- Do not allow gas lines to become kinked or punctured. Place lines away from foot traffic and extreme heat or cold.
- To avoid exposure to potentially dangerous voltages, disconnect the instrument from all power sources before removing protective panels.
- Your product must only use the power cord that was shipped with this product. Do not use this power cord with any other product.

WARNING

Replace faulty or frayed power cords immediately. Contact your Agilent service representative.

- The instrument should be placed in a suitable location with sufficient ventilation to remove gases. Make sure there is enough space around the instrument for it to cool off sufficiently.
- Do not turn on the Power Supply if there is a possibility of any electrical damage. Instead, disconnect the power cord, and contact your Agilent office.
- The supplied power cord must be inserted into a power outlet with a protective earth ground connection.
- Do not change the external or internal grounding connections as this could endanger you or damage the Power Supply.
- The Power Supply is properly grounded when shipped. You do not need to make any changes to the electrical connections or to the Power Supply chassis to ensure safe operation.
- Do not place containers with flammable liquids on this Power Supply. Spillage of the liquid over hot parts may cause fire.
- Never try to repair or replace any component that is not described in this manual without the assistance of an Agilent service engineer. Unauthorized repairs or modifications will result in rejection of warranty claims.
- Always disconnect the AC power cord before attempting any type of maintenance.
- The customer should not attempt to replace the fuses in the Power Supply.
- Damage can result if the Power Supply is stored under unfavorable conditions for prolonged periods (for example, subject to heat, water, and so forth).

- This unit has been designed and tested in accordance with recognized safety standards and is designed for use indoors.
- If the Power Supply is used in a manner not specified by the manufacturer, the protection provided by the Power Supply may be impaired.
- Substituting parts or performing any unauthorized modification to the Power Supply may result in a safety hazard.
- Before plugging in your instrument, verify that the voltage of your local power source is set appropriately.
- Do not use an Uninterruptable Power Supply (UPS) with a Gas Sample Selector.
- The input voltage of external power supply is 100 to 240V. Never use the mains supply which voltage fluctuations are exceeded ±10% out of this range.

CAUTION

Prior to moving, all covers and enclosures must be seated properly. Make sure all covers and enclosures are secure. Disconnect the power supplier and power cord.

WARNING

Appliance inlet coupler (main input power cord) is the power disconnect device. Do not position the instrument such that access to the coupler or plug is impaired.

WARNING

Do not place the Power Supply and Power cord on the top of GC or Gas Sample Selector when GC or Gas Sample Selector is powered on.

CAUTION

Electrostatic discharge is a threat to GC electronics.

The printed circuit (PC) boards in the sampler selector can be damaged by electrostatic discharge. Do not touch any of the boards unless it is absolutely necessary. If you must handle them, wear a grounded wrist strap and take other antistatic precautions.

WARNING

Do not place the Sample Selector behind the GC. Be careful when disconnecting the connection with the GC. During cool-down cycles, the GC emits hot exhaust which can cause burns.

Shipping Instructions

Follow these steps to prepare your Gas Sample Selector for shipping:

1. Cap every inlet and outlet port.
2. Cap all inlet and outlet tubing.
3. Always include the power cord kit and USB cable with the Gas Sample Selector.

Cleaning Instructions

To keep the Gas Sample Selector surface clean, refer to the following:

- Switch the GC off.
- Remove the GC power cable from the mains.
- Disconnect the Gas Sample Selector power cable.
- Use a soft (not hard or abrasive) brush to carefully brush away all dust and dirt.
- If the outer case is dirty, clean it with a soft, clean cloth dampened with mild detergent. Never clean the inside.
- Never use alcohol or thinners to clean the Gas Sample Selector. These chemicals can damage the case.
- Do not get water on the electronics components.
- Do not use compressed air to clean.

Disposal Instructions

Disposal of the Gas Sample Selector must be carried out in accordance with all (environmental) regulations applicable in your country.

Intended Use

Agilent products must only be used in the manner described in the Agilent product user guides. Any other use may result in damage to the product or personal injury. Agilent is not responsible for any damages caused, in whole or in part, by improper use of the products, unauthorized alterations, adjustments or modifications to the products, failure to comply with procedures in Agilent product user guides, or use of the products in violation of applicable laws, rules or regulations.

Recycling the Product

For recycling, contact your local Agilent sales office.



2 Introduction

Introduction **16**

Specifications **26**

Principle of Operation **28**

This chapter describes the working theory of the Agilent G3451A Gas Sample Selector, the sample selector capabilities, some of the important features of the system and the hardware components.

Introduction

The Agilent G3451A Gas Sample Selector is a sample preparation device used for introducing gas samples from multiple sampling bags or cylinders to the GC. An automated switching valve provides sequential sampling from each connected sample bag or cylinder.

CAUTION

The gas sample selector is not suitable for analyzing corrosive samples, such as hydrogen sulfide or ammonia gas (if mixed with water vapor).

The Gas Sample Selector has two available options:

- Bag Version Gas Sample Selector
- Cylinder Version Gas Sample Selector

Both versions support up to eight channels on both the 8890 and 8860 GCs.

Gas Sample Selector bag version

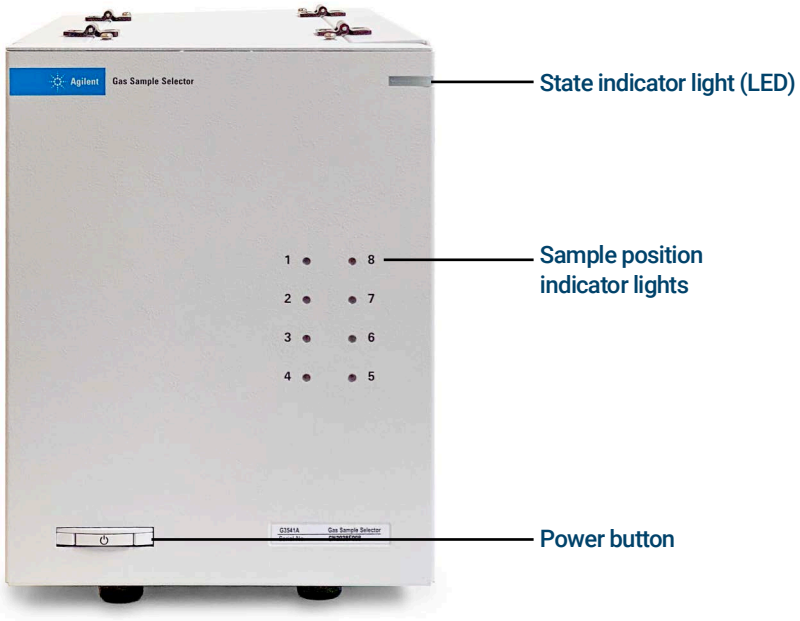

Figure 1 Gas Sample Selector bag version, front view.

Table 1 LED state indicator light guide

Light color	Indication
Red	Error
Green	Ready
Yellow	Not ready



Figure 2 Gas Sample Selector bag version, side view with cover closed.



Figure 3 Gas Sample Selector bag version, side view with cover opened.

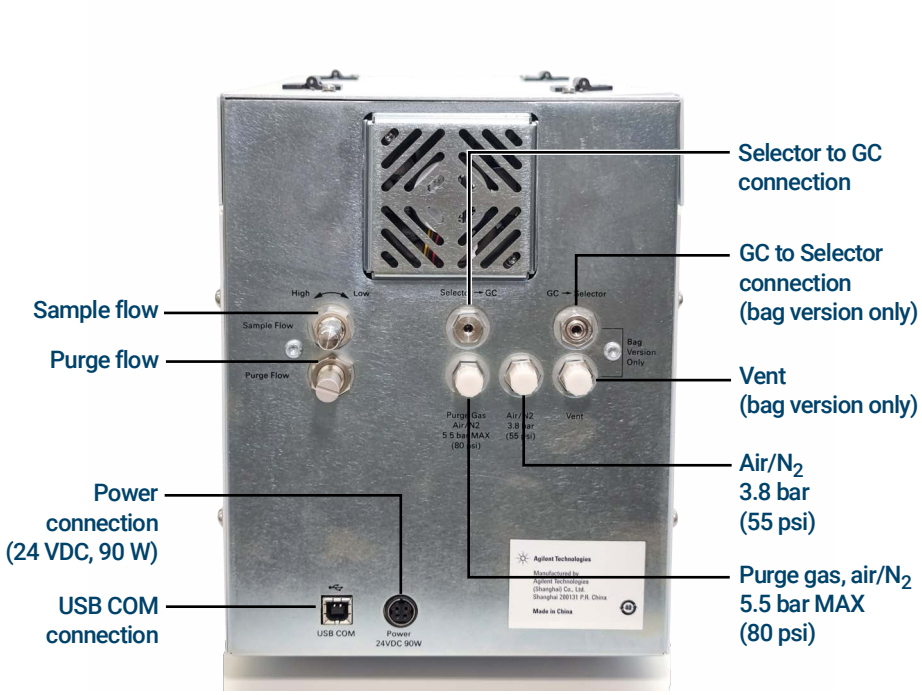

Figure 4 Gas Sample Selector bag version, rear view.

Gas Sample Selector cylinder version

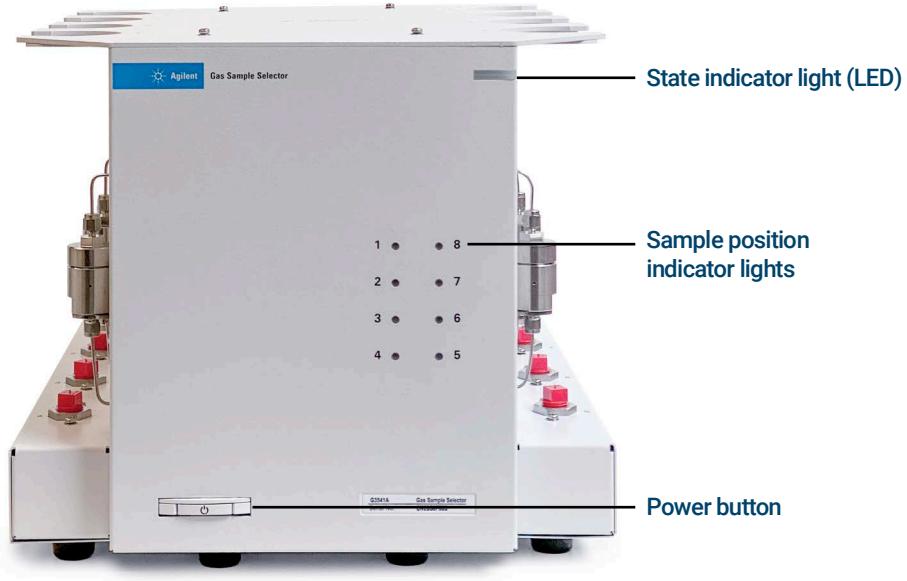

Figure 5 Gas Sample Selector cylinder version, front view without cylinders.

Table 2 LED state indicator light guide

Light color	Indication
Red	Error
Green	Ready
Yellow	Not ready



Figure 6 Gas Sample Selector cylinder version, side view without cylinders.



Figure 7 Gas Sample Selector cylinder version, front view with cylinders.



Figure 8 Gas Sample Selector cylinder version, side view with cylinders.

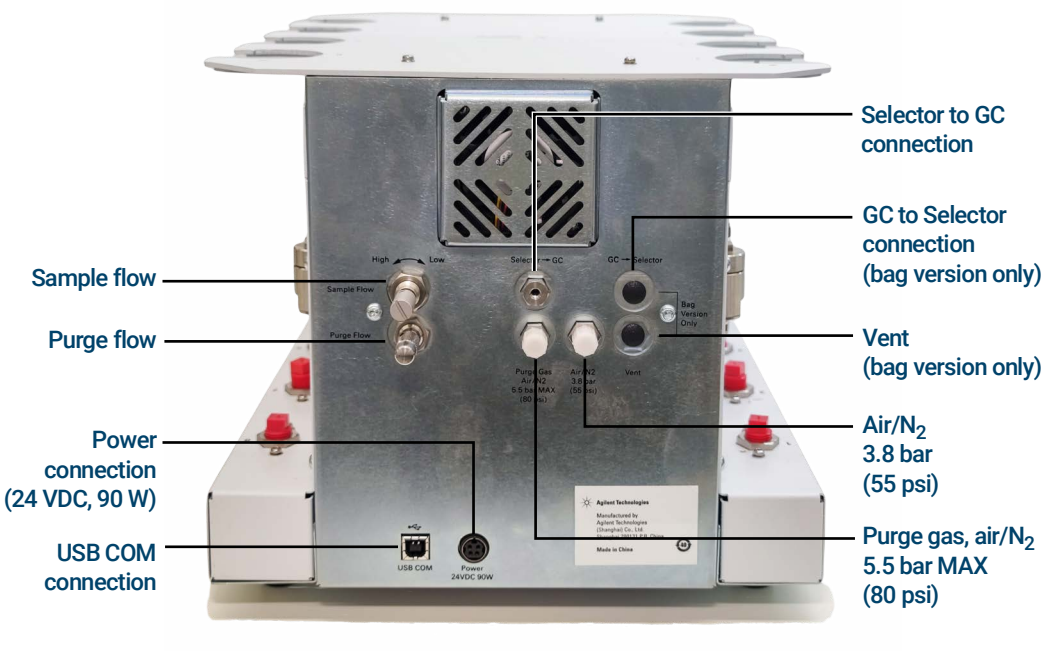

Figure 9 Gas Sample Selector cylinder version, rear view.

Specifications

Table 3 Gas Sample Selector specifications

Feature	Cylinder Version	Bag Version
General	Cylinder Version Gas Sample Selector	Bag Version Gas Sample Selector
Sample Input Pressure/Purge Pressure	Input pressure: 25 bar (363 psi) max Purge gas pressure: 5.5 bar (80 psi) Actuator gas pressure: 3.8 bar (55 psi)	Input pressure: 0.2 bar (2.9 psi) max Purge gas pressure: 5.5 bar (80 psi) Actuator gas pressure: 3.8 bar (55 psi)
Repeatability	8890: ≤1.5% 8860: ≤2% Note: Using 8890/8860 with PCM, and Agilent Data System for analysis of 5% methane in Argon. Results may vary with other samples and conditions.	8890: ≤1.5% 8860: ≤2% Note: Using 8890/8860 with PCM, and Agilent Data System for analysis of 5% methane in Argon. Results may vary with other samples and conditions.
Size	H 255 mm, W 284 mm, D 426 mm.	H 257 mm, W 190 mm, D 426 mm.
Weight	11.6 KG w/o package	8.3 KG w/o package
Electrical supply	24 Vdc, 90 W Max	24 Vdc, 90 W Max
Storage Environmental Requirements With 8890/8860	Humidity: 5% to 95% RH (noncondensing) Storage extremes: ~40 to 70 °C	Humidity: 5% to 95% RH (noncondensing) TStorage extremes: ~40 to 70 °C
Operating Environmental Requirements	Humidity: 5% to 90% (noncondensing) Temperature: 15 to 35 °C Operating altitude 4,600 m above sea level	Humidity: 5% to 90% (noncondensing) Temperature: 15 to 35 °C Operating altitude 4,600 m above sea level
Automatic System Purging	Different purge modes are available. Purge time and flow can be adjusted.	Different purge modes are available. Purge time and flow can be adjusted.
Sample Points	8 Max	8 Max
Injection Position Indication	LED	LED
Communication with GC	USB	USB
Control with Software	Sequence control fully supported by 8860/8890. Firmware 2.2 and Driver 3.4 or later version is required.	Sequence control fully supported by 8860/8890. Firmware 2.2 and Driver 3.4 or later version is required.
Control w/o Software	8890/8860 Local UI/GC Browser UI	8890/8860 Local UI/ GC Browser UI
Sample Connections	Connected to the quick connect with 1/4-inch female NPT	Connected to the rubber tube with ID 1/8-inch to 1/4-inch.

Table 3 Gas Sample Selector specifications (continued)

Feature	Cylinder Version	Bag Version
Sequence Running	Supported	Supported
GC Supported	8890, 8860	8890, 8860

Principle of Operation

The Selector connects up to eight sample sources to a multiposition valve. This valve quickly changes the sample stream to the position specified in the sequence. Manually controlled needle valves (NV1 and NV2) provide adjustment for the sampling and purging gas flow rates. In the sample bag version, a downstream pump draws the sample from the low pressure bag through the GC sampling valve sample loop. Refer to the flow diagrams below.

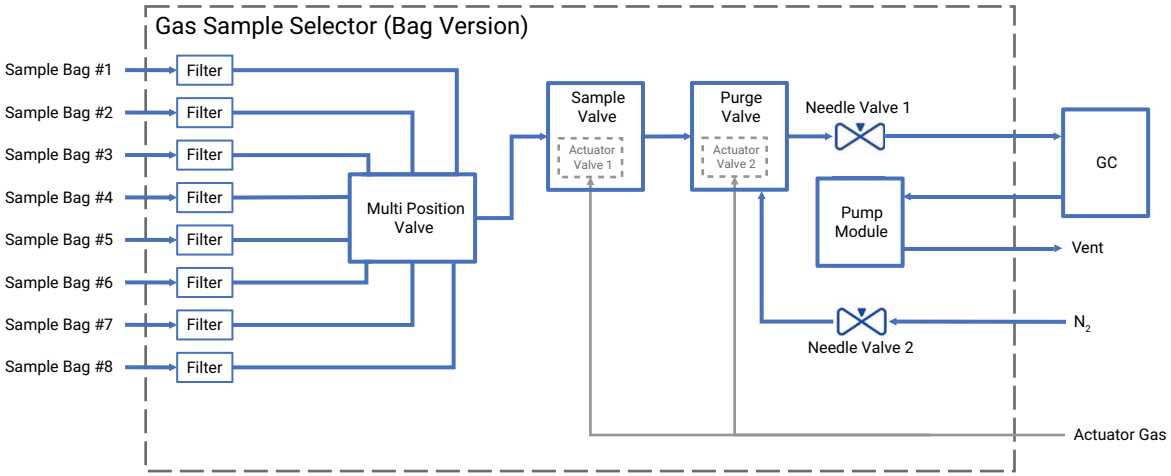

Figure 10 Selector flow diagram for the bag version.

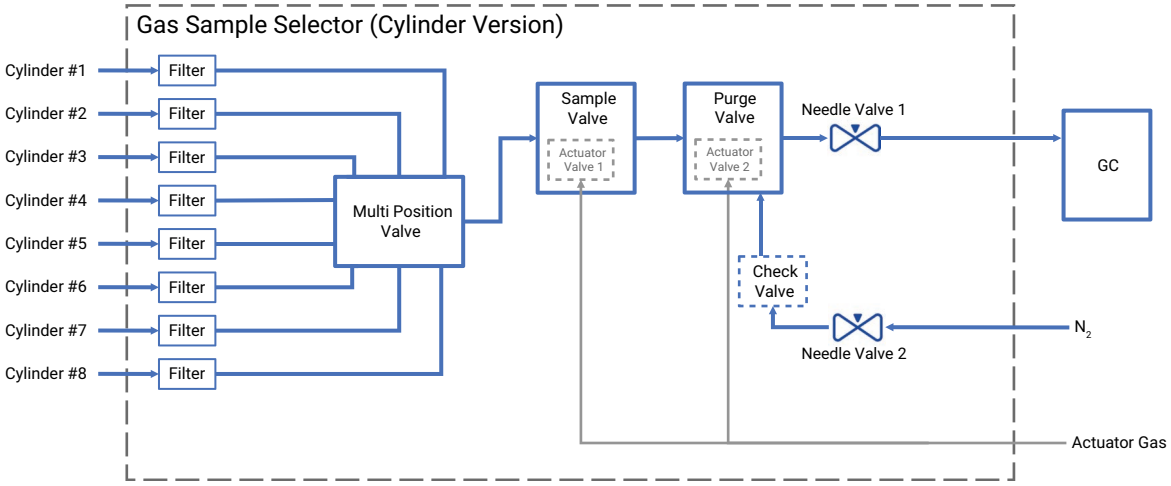

Figure 11 Selector flow diagram for the cylinder version.

The selector also includes automated valves used when purging the system (SV1 and SV2).

3 Installation

Before You Begin 32

Installation for Bag Version Gas Sample Selector 33

Installation for Cylinder Version Gas Sample Selector 43

Before You Begin

The Selector requires an Agilent 8890 or 8860 GC that meets the following requirements:

- Firmware version 2.2 or later.
- Agilent GC Driver version 3.4 or later.
- A Gas Sampling Valve accessory is installed.
  - The Gas Sampling Valve must be configured as valve type **Other** (*not* as a sampling valve).

NOTE

You must install the Gas Sampling Valve and update firmware and driver before installing the Selector, if needed. To obtain the latest GC firmware and driver, contact your Agilent support representative.

Installation for Bag Version Gas Sample Selector



Figure 12 Agilent Gas Sample Selector (bag version).

Shipping kit information (bag version)

Table 4 Shipping kit for the bag version Gas Sample Selector (part number G3541-68027)

No.	Part Number	Description	Qty	Units
1	G3440-20035	Tube 1/16 inch 0.031 inch × 1,000 mm	2	EA
2	G3541-81015	USB cable	1	EA
3	0100-0791	1/16 SS Tube Ftg Nut-Valco	1	EA
4	VLZF110	Ferrule, SS for fitting 1/16 inch, 10/pk	1	EA
5	0100-1525	UNION, SS 1/16 inch	1	EA
6	CP740585	Bulkhead Union	1	EA
7	0100-1488	Ferrule 1/8-inch-TBG-DIA SST	1	EA
8	0100-0057	1/8 inch Nut, SST	1	EA
NA	G3541-90000	Selector Safety and Installation Manual	1	EA



Figure 13 Shipping kit contents for the bag version Gas Sample Selector.

Site preparation

- Leave enough space on the left side of the GC to place the bag version selector (40 cm).
- Installation requires 1 power outlet.

Other materials required (not provided):

- 1/8-inch tubing, terminating in a 1/8-inch male Swagelok fitting, that is long enough to connect the Selector sample exhaust vent to the laboratory exhaust system or fume hood.
- Compressed air supply, terminating in a 1/8-inch male Swagelok connector (for valve actuation) at 380 kPa (55 psi).
- Purge gas supply, nitrogen, air, or helium, terminating in a 1/8-inch male Swagelok connector.

Tools required

- 7/16-inch wrench
- 1/4-inch wrench

Procedure

1 Place the bag version Selector on the left side of the gas chromatograph.



2 Remove any caps from the fittings on the back of the Selector.



3 Connect the GC sampling valve output/vent to the fitting labeled **GC → Selector** on the back of the Selector.





4 Using a wrench, tighten the connection with a 1/4 turn.



5 Connect the fitting labeled **Selector → GC** to the input of the GC sampling valve.

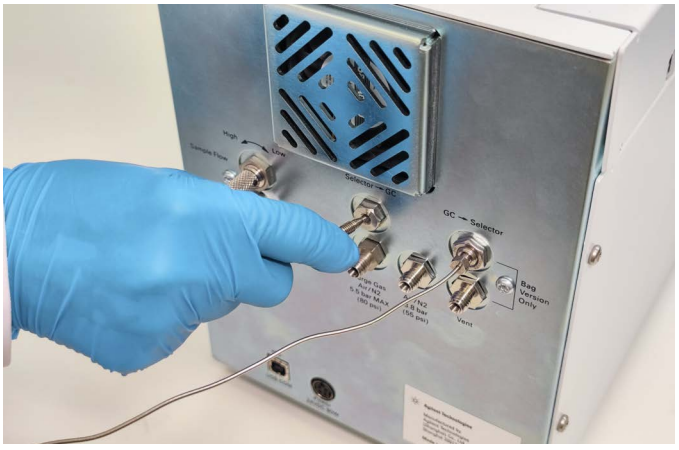



6 Using a wrench, tighten the connection with a 1/4 turn.



7 Connect the purge gas to the **Purge Gas** fitting on the back of the Selector. Set the source supply to a pressure suitable to surge the Selector (no higher than 5.5 bar, or 80 psi).



8 Connect the actuator air supply to the **Air/N_2** fitting on the back of the Selector. Set the supply pressure to 380 kPa (55 psi).



9 Connect the **Vent** fitting on the back of the Selector to the laboratory exhaust system. When routing the tubing, avoid sharp bends or obstructions. The exhaust tubing must be able to vent to atmospheric pressure without clogging or backpressure. Backpressure in the vent line can unbalance the sampling system and affect repeatability. Handle sample gas exhaust in accordance with all laboratory and local safety guidelines.



CAUTION

Do not use liquid leak detection fluid on the vent line or allow liquid to enter the vent line. Liquid and condensation in the vent line can cause backpressure and can be pulled into the Selector and damage the instrument.

10 Connect the USB cable from the Selector **USB COM** connector to the GC. Use either USB connector on the GC.

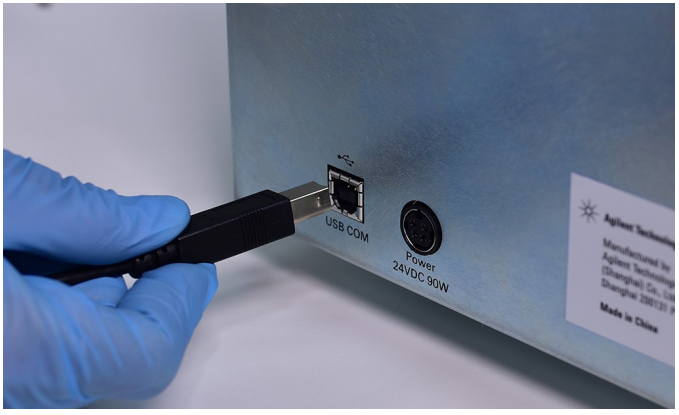

11 Connect the Selector power adapter to the **Power** connector on the back of the Selector, and then to the power outlet.



12 Turn on the Selector.

13 Turn on the GC.

14 Connect sample bags to the Selector.

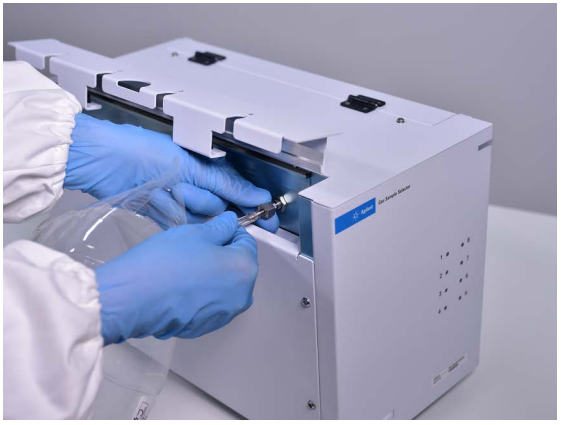



15 Adjust the **sample** needle valve and **purge** needle valve as needed to get the appropriate sample and purge flow rates. The typical sample flow rate is 30 to 50 mL/min. For samples with relatively high humidity, use a lower sample flow rate.

CAUTION

To avoid damaging the needle valve, turn the knob gently.

Installation for Cylinder Version Gas Sample Selector



Figure 14 Agilent Gas Sample Selector (cylinder version).

Shipping kit information (cylinder version)

Table 5 Shipping kit for the Gas Sample Selector cylinder version (p/n G3541-68037)

No.	Part Number	Description	Qty	Units
1	G3541-00021	Clip II Fixture	2	EA
2	G3440-20035	Tube 1/16 inch 0.031 inch × 1,000 mm	1	EA
3	CP86757	SCR-SKT Button-HD T-20 M4X.7 8 SST Zn	6	EA
4	0460-3131	Tape-industrial 12 mm-WD PTFE White	1	EA
5	G3541-81015	USB cable	1	EA

Table 5 Shipping kit for the Gas Sample Selector cylinder version (p/n G3541-68037) (continued)

No.	Part Number	Description	Qty	Units
6	0100-1525	UNION, SS 1/16 inch	1	EA
NA	G3541-90000	Selector Safety and Installation Manual	1	EA



Figure 15 Shipping kit contents for the cylinder version Gas Sample Selector.

Site Preparation

NOTE

It is recommended that the capacity of the sampling gas cylinder be less than 500 cc. Choose a suitable capacity of 100 to 500 cc.

- Leave enough space on the left side of the GC to place the cylinder version selector (40 cm).
- Installation requires 1 power outlet.

Other materials required (not provided):

- 1/8-inch tubing, terminating in a 1/8-inch male Swagelok fitting, that is long enough to connect the Selector sample exhaust vent to the laboratory exhaust system or fume hood.
- Compressed air supply, terminating in a 1/8-inch male Swagelok connector (for valve actuation) at 380 kPa (55 psi).
- Purge gas supply, nitrogen, air, or helium, terminating in a 1/8-inch male Swagelok connector.
- Sample cylinders must use a 1/4-inch Male NPT fitting. (The Selector includes female 1/4-inch NPT fittings.)

Tools required

- 7/16-inch wrench
- 1/4-inch wrench
- Adjustable wrench
- PTFE tape
- Swagelok male connectors (8 sets) matched with 1/4-inch Swagelok NPT female fittings.

NOTE

For the Swagelok quick connectors, the following are recommended:

- **1/4-inch Swagelok NPT female connector, Swagelok part number SS-400-71-4**
- **Swagelok part number SS-QTM2A-B-4PM (Male)**
- **Swagelok part number SS-QTM2-D-4PM (Male)**
- **Option#4 to be added**

Procedure

1 Place the cylinder version selector on the left side of the gas chromatograph.



2 Remove any caps from the fittings on the back of the Selector.



3 Connect the fitting labeled **Selector → GC** to the input of the GC sampling valve.





4 Using a wrench, tighten the connection with a 1/4 turn.



5 Connect the purge gas to the **Purge Gas** fitting on the back of the Selector. Set the source supply to a pressure suitable to surge the Selector (no higher than 5.5 bar, or 80 psi).



6 Connect the actuator air supply to the **Air/N_2** fitting on the back of the Selector. Set the supply pressure to 380 kPa (55 psi).



7 If not already connected, connect the GC sampling valve output/vent to the laboratory exhaust system or fume hood. Handle sample gas exhaust in accordance with all laboratory and local safety guidelines.
When routing the tubing, avoid sharp bends or obstructions. The exhaust tubing must be able to vent to atmospheric pressure without clogging or backpressure. Backpressure in the vent line can unbalance the sampling system and affect repeatability.

CAUTION

Do not use liquid leak detection fluid on the vent line or allow liquid to enter the vent line. Liquid and condensation in the vent line can cause backpressure and can be pulled into the Selector and damage the instrument.

8 Wrap the Swagelok male connector with PTFE tape for two turns, then thread it into female connector on the sample selector at each cylinder position.

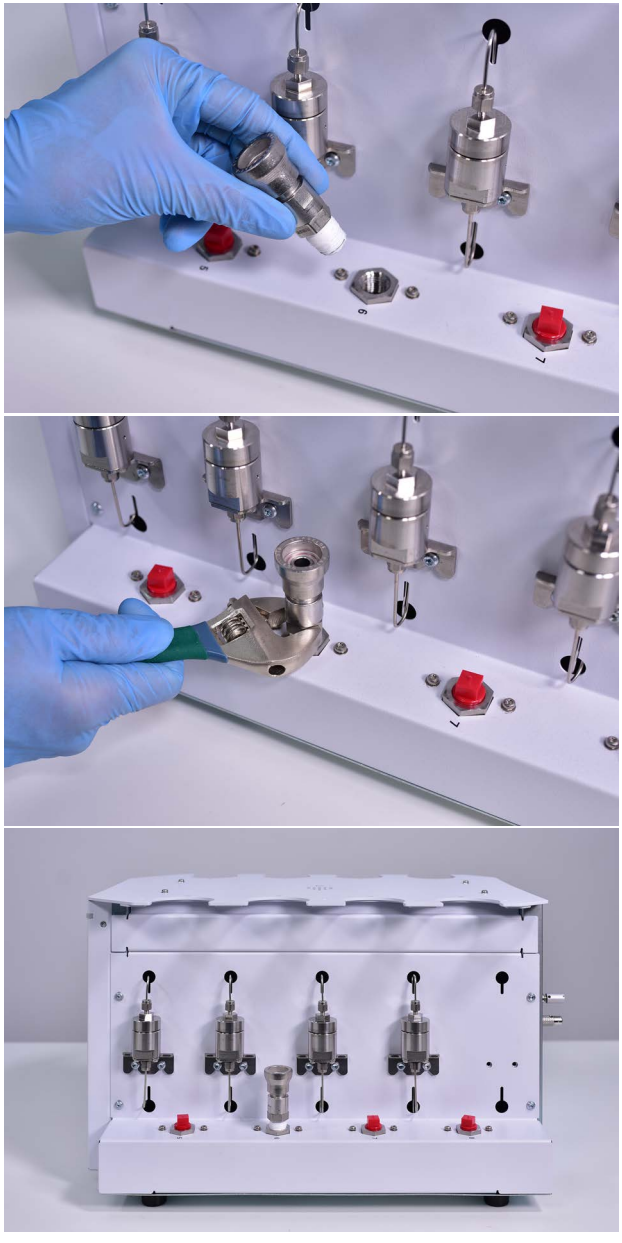

9 Connect the USB cable from the Selector **USB COM** connector to the GC. Use either USB connector on the GC.

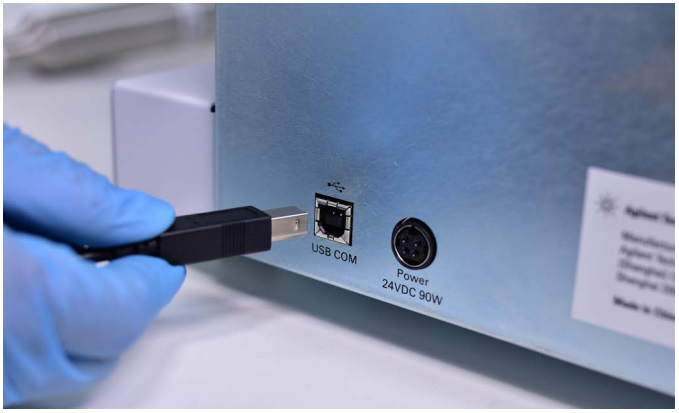

10 Connect the Selector power adapter to **Power** connector on the back of the Selector, and then to the power outlet.

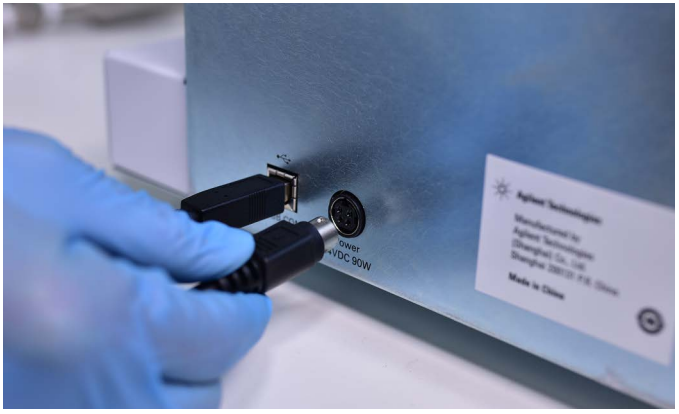

11 Turn on the Selector.

12 Turn on the GC.

13 Install any additional sample cylinders as desired.



14 Adjust the **sample** needle valve and **purge** needle valve as needed to get the appropriate sample and purge flow rates. The typical sample flow rate is approximately 100 mL/min.

CAUTION

To avoid damaging the needle valve, turn the knob gently.

4 Operation

Method Parameters 54

Selector Work Flow 59

Method Parameters

The following settings are found in the Local User Interface (LUI), Browser User Interface (BUI), or the Data System Adapter (DSA).

Building a method

Go to the **Method** screen, choose **Selector**, and enter analysis parameters for **Load Time**, **Equilibration Time**, and **Purge Time**.

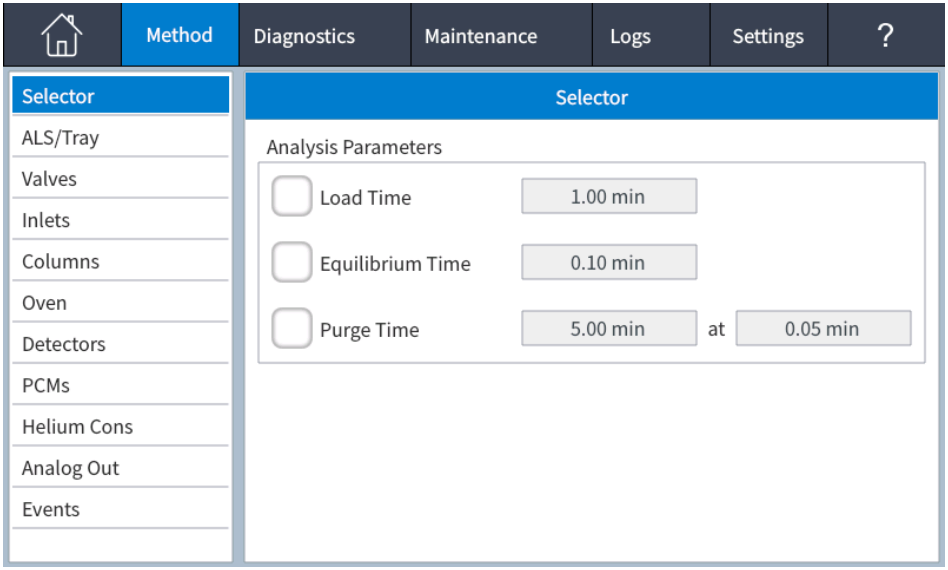

Figure 16 Method screen for the LUI.

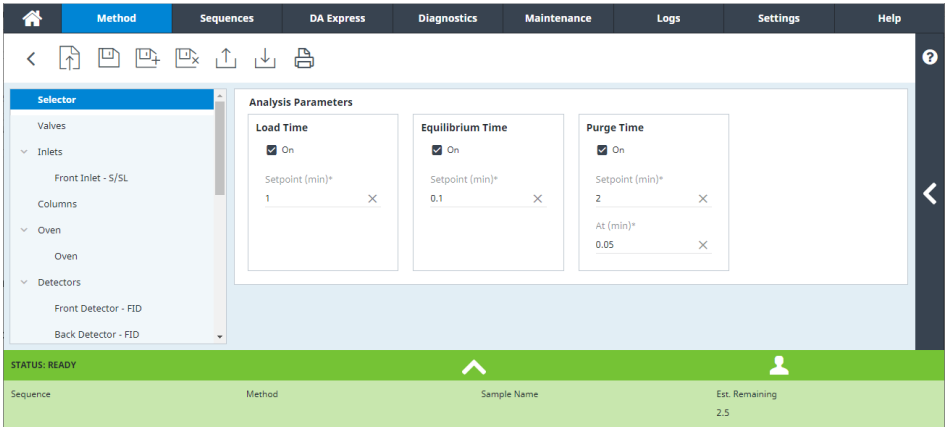

Figure 17 Method screen for the BUI.

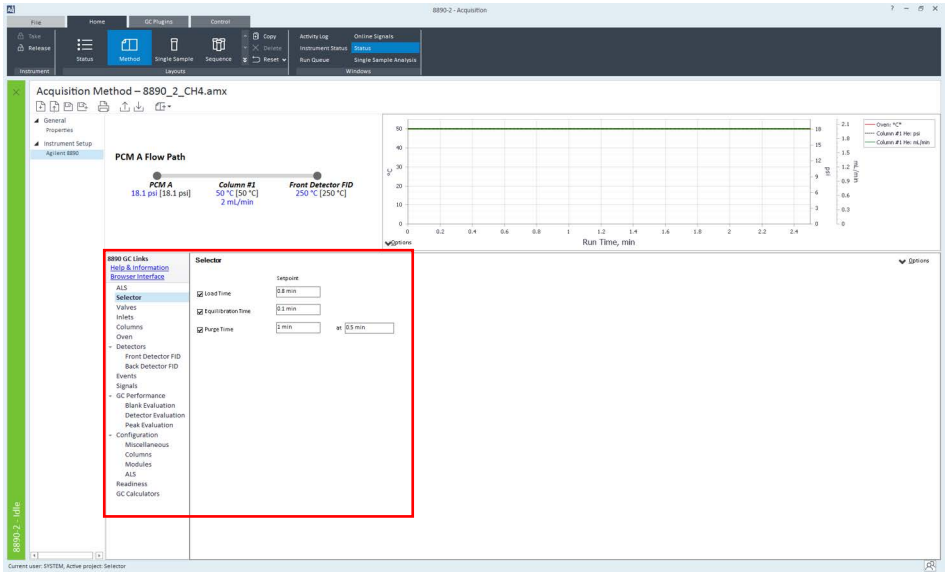

Figure 18 Method screen for the DSA.

Term definitions

Load Time: The time for the sample to fill the sample loop.

Equilibration Time: After filling the sample loop, the GC will wait for this time to allow the sample to equilibrate before starting the injection.

Purge Time... at: After the injection starts, and after the delay for the time entered in the at field, the Selector will purge the GC sample loop with the purge gas for the specified number of minutes.

Programing a sequence

To use the Selector in a sequence:

1 Create or open a sequence table.

2 For each sequence step, set the **Injector Source** to **Selector**. Examples are shown for BUI and DSA.

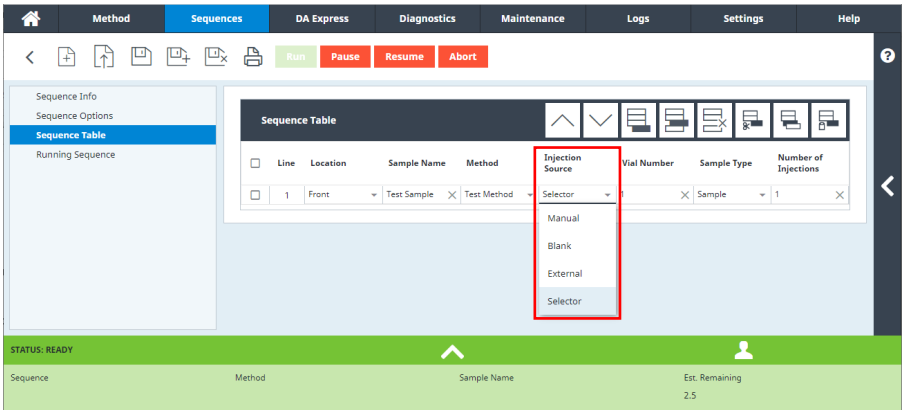

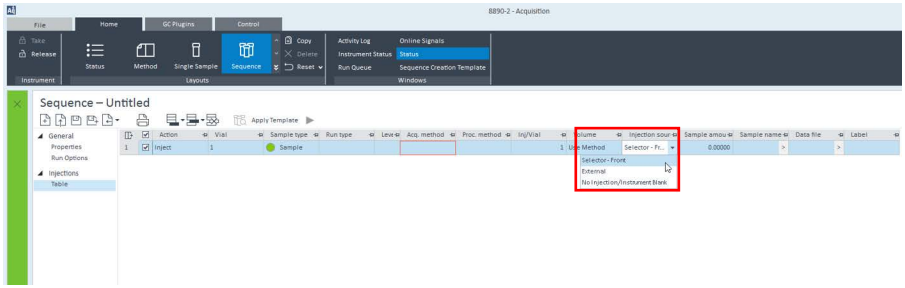

3 For the **Vial** position choose the **sample bag** or **cylinder** position, **1 - 8**. Example shown for BUI.

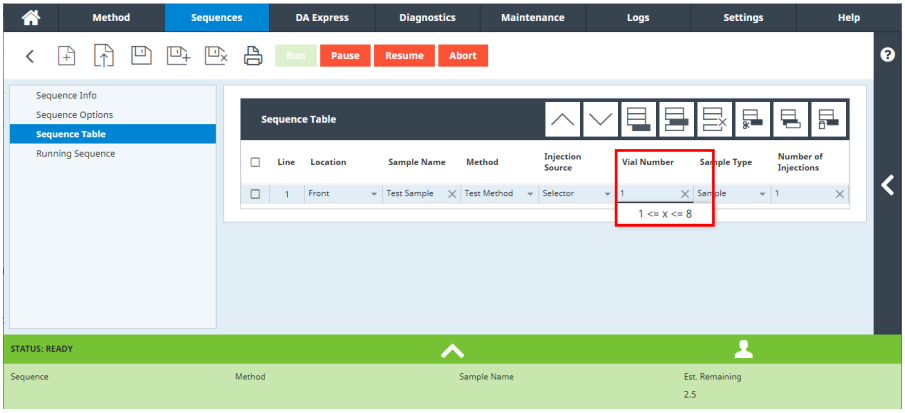

Selector Work Flow

1. Connect the samples to the selector. Note the numbered position for each sample.
2. For sample bags: If needed, use the **sampling mode** from **Maintenance** operation to prepare the Selector. See **Sampling mode** for more details.
3. Create a sequence. Use the sample position as the vial number in the sequence, and choose Selector as the injection source.
4. Run the sequence.
5. Remove the samples from the selector.
6. Use a maintenance mode as needed to purge the Selector of residual sample.

5 Maintenance and Troubleshooting

Maintenance 62

Troubleshooting 78

Maintenance

Replace gas filter for bag version

Tools required

- 1/4-inch open-ended wrench
- 7/16-inch open-ended wrench

Procedure

1 Use a 1/4-inch wrench to loosen the pagoda connector.



2 Manually remove the pagoda connector.





3 Use two wrenches, 1/4-inch and 7/16-inch, to disassemble the pagoda connector.





4 Use tweezers to take out the washer and filter.

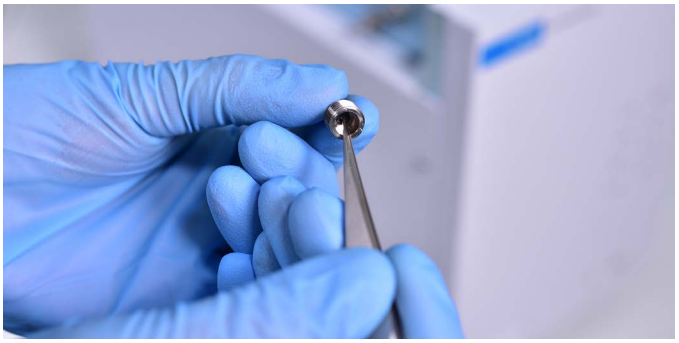



5 Replace the filter. (Agilent advises replacement of the filter at regular intervals. Filter P/N: 3150-1017).

6 To reassemble the pagoda connector, perform **step 4** back to **step 1**.

WARNING

For reassembly: Make sure to manually screw the pagoda connector before using the 1/4-inch wrench to tighten it to the Selector. Using a wrench directly might wear out the screw thread and ultimately cause gas leakage, which is NOT reversible.

Replace gas filter for cylinder version

Tools required

- 1/16-inch open-ended wrench
- 7/16-inch open-ended wrench

Procedure

1 Use 1/16-inch wrench to loosen the connection to upper tubing.





2 Use 7/16-inch wrench to loosen the cap of the filter kit.



3 Manually remove the cap, be patient as the screw thread is quite long.





4 Take out the filter and remove the plastic housing.





5 Replace the filter. (Agilent advises replacement of the filter at regular intervals. Filter P/N: G3541-67002).

6 To reassemble the pagoda connector, perform **step 4** back to **step 1**.

Sampling mode

This mode is a pretreatment and is used for low concentration samples or permanent gases. This mode unblocks the entire gas pipeline (for the bag version the pump will also turn on in this mode), so the sample gas can purge any remaining gas from the entire flow path.

When very low-concentration samples or permanent gases such as oxygen and nitrogen are analyzed, the gas remaining in the selector system pipeline may affect the sample results, especially when multiple gas bags are connected. For the sample bag at the back of the injection sequence, a long wait time will cause the small amount of gas remaining in the pipeline to continuously diffuse into the gas bag, causing contamination of the sample. This mode helps minimize this pollution.

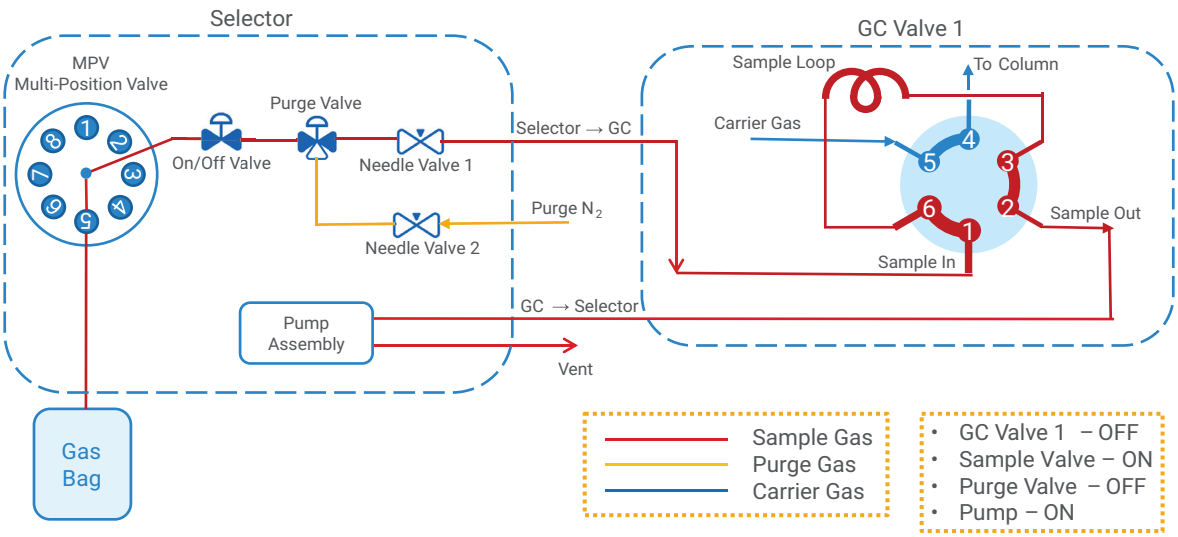

Figure 19 Sampling mode for bag version.

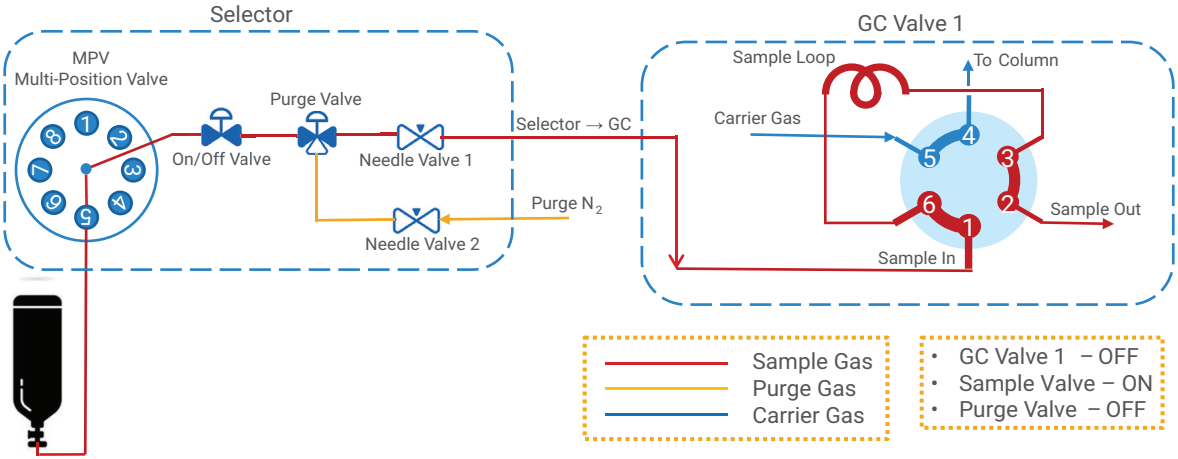

Figure 20 Sampling mode for cylinder version.

To run sampling mode:

1. Connect the gas bag or cylinder to the selector.
2. Choose the connection position.
3. Turn on the **Sampling Mode**.
4. Turn on the gas bag or gas cylinder switch.

Purge mode

Purge mode is a maintenance mode used for special pipe cleaning. Similar to the routine purge after each injection in the normal working flow, this mode will purge the second half of the pipeline. The difference is that this mode does not have to be integrated in the method, but can be started or stopped at any time. This mode is used to further reduce residue.

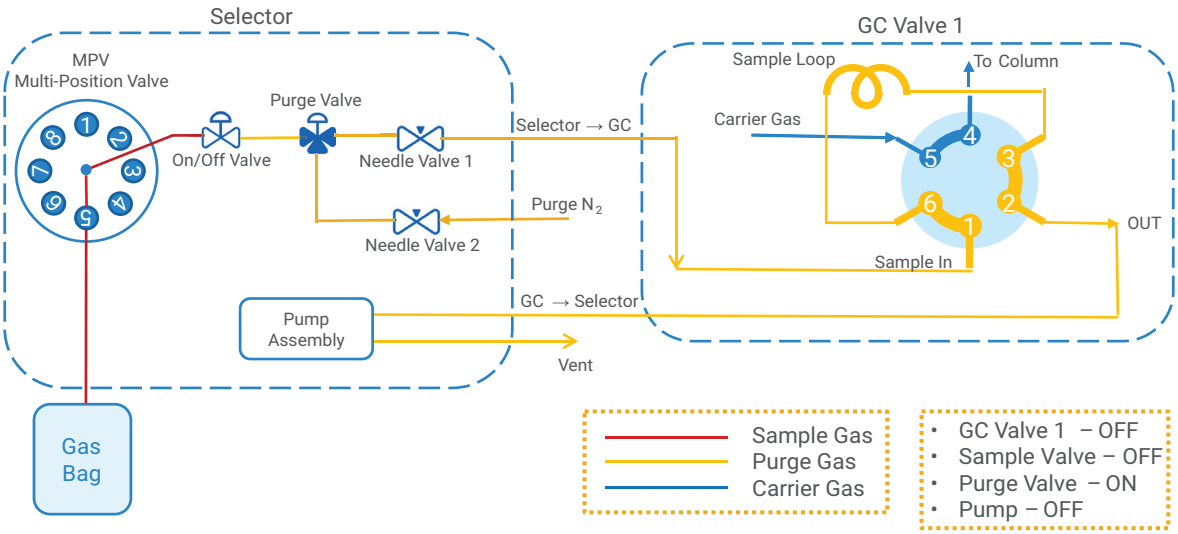

Figure 21 Purge mode (maintenance) for bag version.

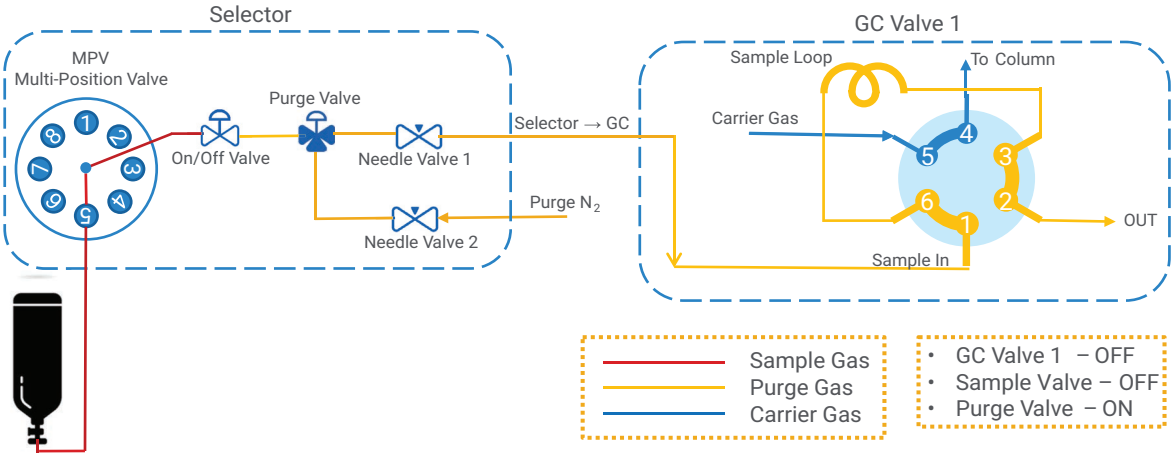

Figure 22 Purge mode (maintenance) for cylinder version.

Sweep mode

This mode performs a deep purge of the entire pipeline. Before starting this mode, remove all sample gas bags or sample cylinders. The purge gas flows through the entire system, and sequentially out through each sample input port.

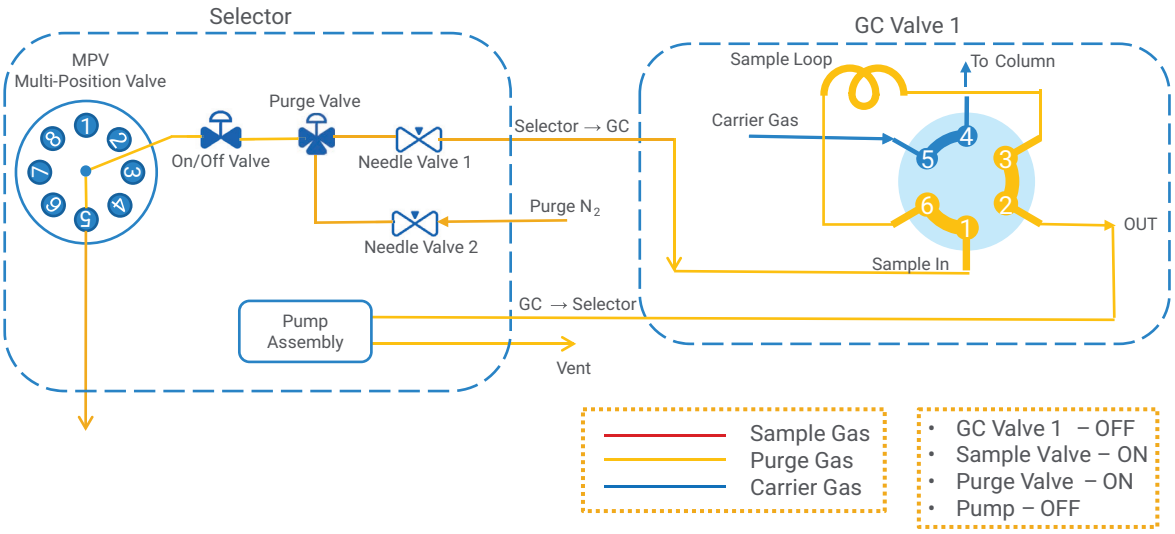

Figure 23 Sweep mode (maintenance) for bag version.

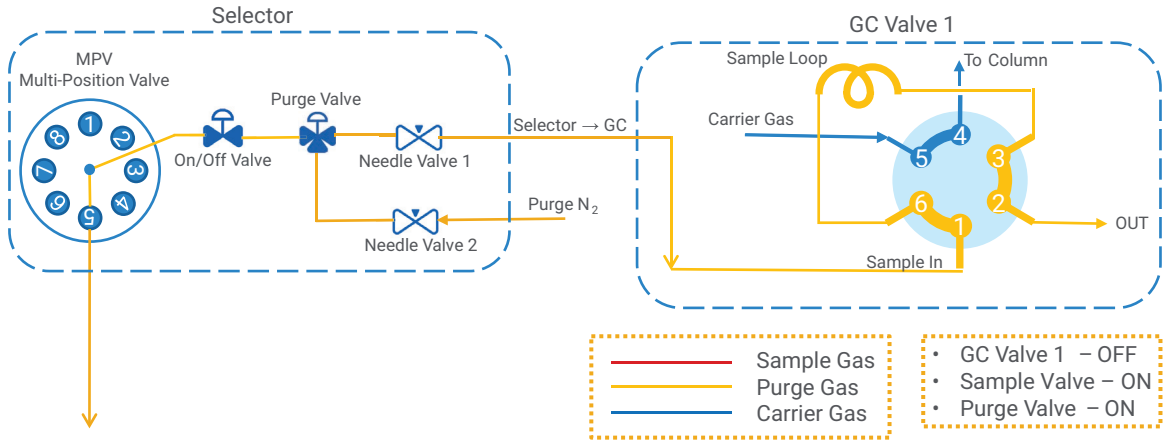

Figure 24 Sweep mode (maintenance) for cylinder version.

Consumables and parts

Bag pagoda with filter

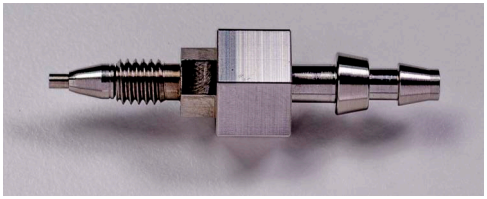

Figure 25 Bag pagoda with filter, assembled.

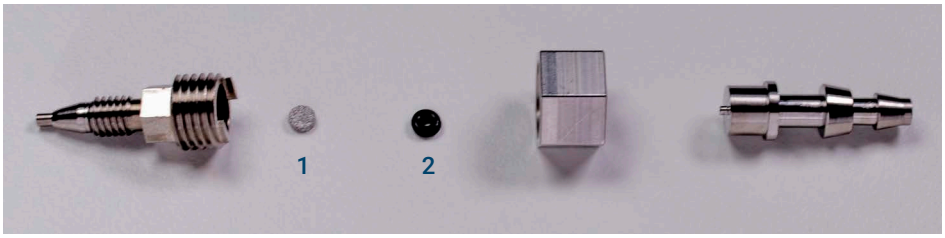

Figure 26 Bag pagoda with filter, disassembled.

Table 6 Bag pagoda with filter parts list

No.	Part Number	Description
1	315-1017	Frit 1/8-in-DIA 10u-Pore 1mm-THK SST
1	0905-0151	O-Ring 2-002 Fluorocarbon BLK

Cylinder filter kit

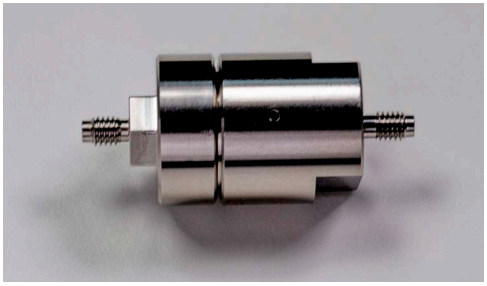

Figure 27 Cylinder filter kit, assembled.

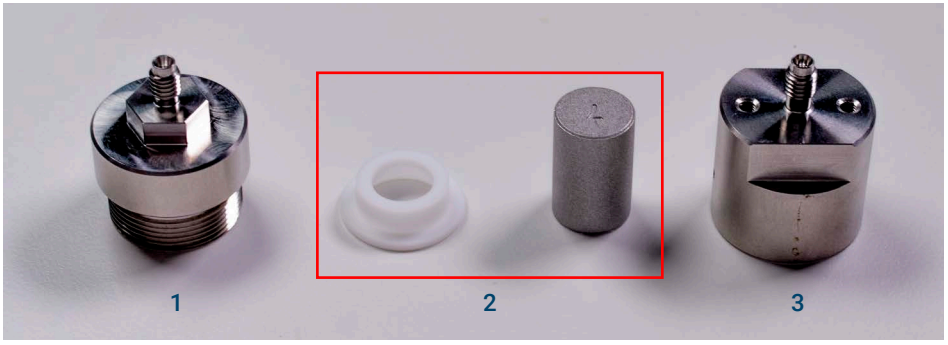

Figure 28 Cylinder filter kit, disassembled.

Table 7 Cylinder filter kit parts list

No.	Part Number	Description
1	G3541-20003	Cylinder Filter Cap
2	G3541-67002	Filter with Sealing Gasket Cylinder
3	G3541-20002	Cylinder Filter Housing

Troubleshooting

Error list for troubleshooting

Table 8 Error list for troubleshooting

Instrument Condition Alert	Description
Selector mpv position not ready	Multiple position valve is not in correct setpoint
Selector on/off valve open	Sample On/Off valve not connected
Selector on/off valve shorted	Sample On/Off valve not working properly
Selector purge valve open	Purge valve not connected
Selector purge valve shorted	Purge valve not working properly
Selector pump valve open	Pump valve not connected
Selector pump valve shorted	Pump valve not working properly
Selector pump switch open	Pump switch not connected
Selector pump switch shorted	Pump switch not working properly
Selector fan open	Fan not connected
Selector fan shorted	Fan not working properly
Selector fan lockup	Fan not rotating
Selector 24v abnormal	24 V power out of range
Selector 12v abnormal	12 V power detection is not good
Selector 5v abnormal	5 V power detection is not good
Selector failed memory read	Read eeprom error
Selector sample loading	Hang up the instrument in 'pre-run' state until sample loading completed
Selector system busy	Selector system busy

Chromatographic symptoms

General information

The Gas Bag Selector is an automatic sampling device, which is used to transfer the gas samples in multiple gas bags or cylinders to the sample loop of GC GSV according to method parameters and trigger the GC to start running. The sample chromatogram obtained through Selector should be consistent with the sample chromatogram obtained when the sample bag/cylinder is directly connected to GC GSV for injection.

If there are some problems during use, it is important to distinguish whether the problems are caused by selector or caused by GC system. For this goal, disconnect the selector from the GC GSV, and directly inject sample in the gas bag/cylinder to the GC GSV to ensure that the GC system can produce peaks normally. If the GC fails to produce normal peaks, the problems may be caused by GC system. Refer to GC troubleshooting manual to fix it.

To check the chromatographic symptoms for bag version

Peaks Not Displayed/No Peaks

1. Check if the Selector is connected correctly to the GC.
2. Check that the actuator gas supply is connected correctly to the Air/N_2 fitting on the back of the Selector and confirm the supply pressure is 380 kPa (55 psi).
3. Check if the needle valve fittings on the back of the Selector is tightly closed.
4. Check that the pump is heard working during the selector loading stage. If not, there may be a problem with the pump assembly. Please contact Agilent for further support.
5. Connect a flow meter to the vent port to measure the sample flow rate during selector loading stage and ensure that it matches the flow rate set during installation. If the flow is zero or too low (normally the vent flow >20 mL/min), there may be a restriction or leak in the selector system.
   (See **Restriction and leak check** on page 82).
6. If no issues were found from step1 to step 5, refer to the GC troubleshooting manual to screen the GC system.

Peak Areas Not Repeatable

1 There may be a restriction or leak in the selector system. (See **Restriction and leak check** on page 82).

2 Refer to the GC troubleshooting manual to screen the GC system.

Low Peak Area or Height (Low Sensitivity)

1 There may be a restriction or leak in the selector system. (See **Restriction and leak check** on page 82).

2 Refer to the GC troubleshooting manual to screen the GC system.

Contamination or Carryover

1 Make sure the vent outlet is not end capped.

2 Check for sample carryover from previous runs. Try to use the **Sampling mode** on the **Maintenance** tab when connecting sample bags to the selector.

3 Run the **Purge mode** in **maintenance**, purging the system using N_2 to see if the ghost peaks/carryover go away or get smaller.

4 Remove all the gas bags from the selector. Run **Sweep mode** in **maintenance**, purging the whole system using N_2 to see if the ghost peaks/carryover go away or get smaller. (See **Sweep mode** on page 74).

5 Clean or change the filters. (See **Replace gas filter for bag version** on page 62.)

6 Refer to GC troubleshooting manual to screen the GC system.

To check the chromatographic symptoms for cylinder version

Peaks Not Displayed/No Peaks

1 Check if the Selector is connected correctly to the GC.

2 Check that the actuator gas supply is connected correctly to the Air/N_2 fitting on the back of the Selector and confirm the supply pressure is 380 kPa (55 psi).

3 Check if needle valve fitting on the back of the Selector is tightly closed.

4 Check the sample pressure of the cylinder and make sure it has a pressure of at least 1 bar.

5 Connect a flow meter to the GC GSV sample out tubing to measure the sample flow rate during selector loading stage and ensure that it matches the flow rate set during installation. If the flow is zero or too low (normally the sample flow >50 mL/min), there may be a restriction or leak in the selector system. (See **Restriction and leak check** on page 82).

6 If no issues were found from step1 to step 5, refer to the GC troubleshooting manual to screen the GC system.

Peak Areas Not Repeatable

1 There may be a restriction or leak in the selector system. (See **Restriction and leak check** on page 82).

2 Refer to the GC troubleshooting manual to screen the GC system.

Low Peak Area or Height (Low Sensitivity)

1 There may be a restriction or leak in the selector system. (See **Restriction and leak check** on page 82).

2 Refer to the GC troubleshooting manual to screen the GC system.

Contamination or Carryover

1 Make sure the vent outlet is not end capped.

2 Check for sample carryover from previous runs.

3 Run **Purge mode** in **maintenance**, purging the system using N_2 to see if the ghost peaks/carryover go away or get smaller.

4 Remove all the cylinders from the selector. Run **Sweep mode** in **maintenance**, purging the whole system using N_2 to see if the ghost peaks/carryover goes away or get smaller. (before running sweep, make sure to connect Swagelok male connector to keep the flow path open). (See **Sweep mode** on page 74).

5 Clean or change the filters. (See **Replace gas filter for cylinder version** on page 66).

6 Refer to the GC troubleshooting manual to screen the GC system.

Restriction and leak check

To check the restriction and leak for bag version

Connect a flow meter to the vent port to measure the sample flow rate during selector maintenance **Sampling mode** running and ensure that it matches the flow rate set during installation.

- If the flow is zero or too low (normally >20 mL/min), there may be a restriction in the selector system. See **To check the gas bag selector restriction** on page 82.
- If the flow rate is normal or even exceeds the initial flow rate during installation, and the chromatographic peak area is smaller than expected, there may be leakage in the system. See **To check the gas bag selector leaks** on page 82.

To check the gas bag selector restriction

1. Confirm the needle valves at the back of selector are not fully closed.
2. Remove all the gas bags.
3. Connect a flow meter to the vent port.
4. Run the **Sampling mode** in the **Maintenance** tab for all 8 positions. Record and compare the vent flow of each position.
   - If only one or several positions has low flow (normally >20 mL/min), while the flow of others is normal, run the **Sweep mode** first, then clean or change the filters corresponding to these positions.
   - If the vent flow is basically the same in all positions and all are very low, contact Agilent for further support.

To check the gas bag selector leaks

1. Check that the 8-way pagoda ports and the connectors between the selector and GC GSV are connected corrected and tightened.
2. Remove all the gas bags.
3. Connect a flow meter to the current pagoda port.
4. Run the **Purge mode** in the **Maintenance** tab for corresponding position. Check if there is flow in the flow meter.

- If there is a flow in the pagoda head connector, there is a leak in the system. Contact Agilent for further support.
- If no flow detected, move to **step 5**.

5 Run the **Sweep mode** in the **Maintenance** tab for each position. Use the flow meter to measure the flow at the pagoda port for all 8 positions. Record and compare the flow rate.

- If the pagoda measured flow rate at one or several positions is significantly lower than other positions, check whether the filters corresponding to these positions are properly installed and connected.
- If all the pagoda measured flow rate is similar, move to **step 6**.

6 Remove the purge gas supply and connect a flow meter to the purge gas fitting on the back of the Selector.

7 Run the **Sampling mode** in the **Maintenance** tab, check whether flow can be measured at the purge gas port. If so, contact Agilent for further support.

To check the restriction and leak for Cylinder version gas selector

Use a stable and safe gas cylinder (Air or N_2 etc.) with a two-stage pressure reducing valve as the test sample.

Connect the gas source to a quick-plug connector.

1 Confirm the needle valves at the back of selector are not fully closed.

2 Remove the purge gas supply.

3 Connect the test gas source to one position through the quick connector.

4 Performing a pressure drop test:

a Set the N_2 or Air cylinder regulator pressure to 415 kPa (60 psi).

b Fully turn the regulator pressure adjustment knob counterclockwise to shut the secondary valve.

c Wait for one minute. Observe and record the displayed pressure of the secondary pressure reducing valve at that time.

d Block the exit of the GC GSV sample out with a dead plug.

e Run the **Sampling mode** in the **Maintenance** tab for the corresponding position (0.5 to 1 minute is suggested).

f Observe and record the displayed pressure of the secondary pressure reducing valve at that time.

g If there is a pressure loss greater than 7 kPa (1 psi) in any of the two observe steps above, there is a leak within the selector, contact Agilent for further support.

5 Turn on the cylinder valve and set the test gas cylinder regulator pressure to 415 kPa (60 psi).

6 Remove the dead plug.

7 Run the **Sampling mode** in the **Maintenance** tab for the corresponding position (0.5 to 1 minute is suggested).

8 Measure and record the flow in GC GSV sample out tubing.

9 If you hear obvious gas flow during the loading process, it proves that the system is leaking. Contact Agilent for further support.

10 Repeat **step 3** to **step 9** for each position and compare the flow rate get in the GC GSV sample out tubing.

- If only one or several of positions has low sample out flow, while the flow of others is normal (normally >80 mL/min), clean or change the filters corresponding to these positions, and run the **Sweep mode** in the **Maintenance** tab. See **Replace gas filter for cylinder version** on page 66, and **Sweep mode** on page 74.
- If the sample out flow is basically the same in all positions and all are very low, contact Agilent for further support.

11 Choose any position and run the **Sampling mode** in the **Maintenance** tab.

12 Check if there is a flow from purge gas fitting on the back of the Selector by using a flow meter. If so, contact Agilent for further support.

This page intentionally left blank.

www.agilent.com

© Agilent Technologies 2023

Fourth Edition, November 2023

G3541-90001

